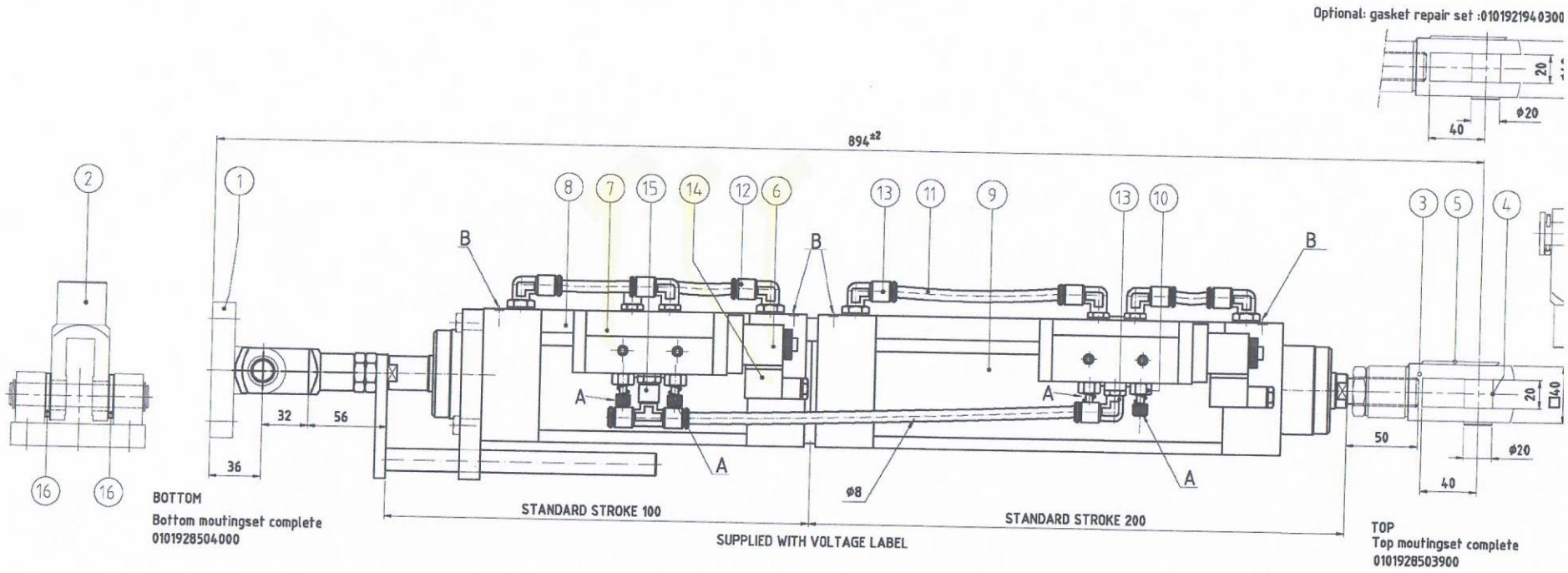

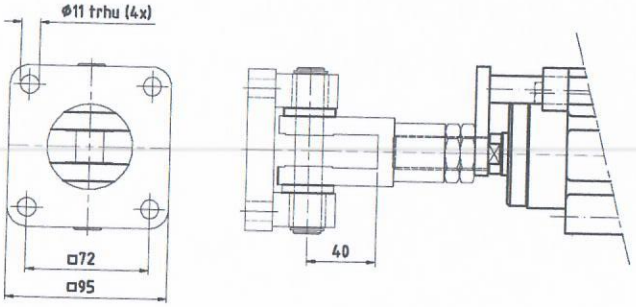

230V 46....62Hz
IP65

per stroke (approx. 150dm³/h)
per stroke (approx. 332dm³/h)

Air consumption 4 bar(g) 9.0 dm³
Air consumption 9 bar(g) 16.6 dm³

Min. pressure 6 bar(g) supply
Max. pressure 9 bar(g) supply

A.Cylinder speed adjustment
B.Cylinder cushioning adjustment

Weight 15.4 kg

KEY	QTY	DESCRIPTION/TITLE	TYPE	MAT.
16	2	Spacer bushing	01019283748 00	
15	1	T-fitting 8 mm push in	01019221860	
14		Solenoid connector	01019219473	CI
13	5	Fitting 1/4BSP x 8MM push in	01019257273	
12	4	Fitting 3/8BSP x 8MM push in		
11	0.5M	Air piping hose	01019041434	
10	4	Exhaust gas flow control	01019098488	
9	1	Pneumatic cylinder		
8	1	Pneumatic cylinder steel		
7	2	Solenoid valve 5/2	0101921947300	CI
6	2	Solenoid (24VDC, 110VAC, 230VAC)	0101921971400	CTA
5	1	Spring lock pin 4.5 mm steel	0101923065500	
4	1	Yoke in BS	0101923065800	
3	1	Yoke incl. locking pin	0101908975700	
2	1	Forked end incl. pin	0101919745900	
1	1	Bottom hinge	0101908962800	

REV.	DESCRIPTION	NAME	DATE
F	Full update	WS	02-02-2012
E	Updated data sheet	WS	18-04-2011
D	full update	CE	25-02-2011
C	Change type	AJ	10-03-2010
B	Change layout	RH	08-09-2009
A	General update	BE	23-03-2006

Drawing SYMBOL D86180

Checked By : AJ
Date : 10-03-2010

Pneumatic double actuating cy
Type:SI-80X100/200-XI

PROJECTION

DRAWN: HM
SCALE: None
DATE: 11-11-2002

DRAWING No: D22327

REVISION F

AALBORG INDUSTRIES

THERMAL FLUID HEAT TECHNOLOGY

PO Box 145, 3280 AC Spijkenisse, The Netherlands
Tel. : +31 181 650 500
Fax : +31 181 650 501
E-mail : rtsw@aalborg-industries.nl

THIS DRAWING AND DESIGN SHOWN HEREIN IS THE PROPERTY OF AALBORG INDUSTRIES AND MUST NOT BE USED BY OR REPRODUCED FOR THIRD PARTY

Item number: D22327-00001