MODIFICATION	
A	CREATION

REP 0000

REP 0001 SYM REP 0000

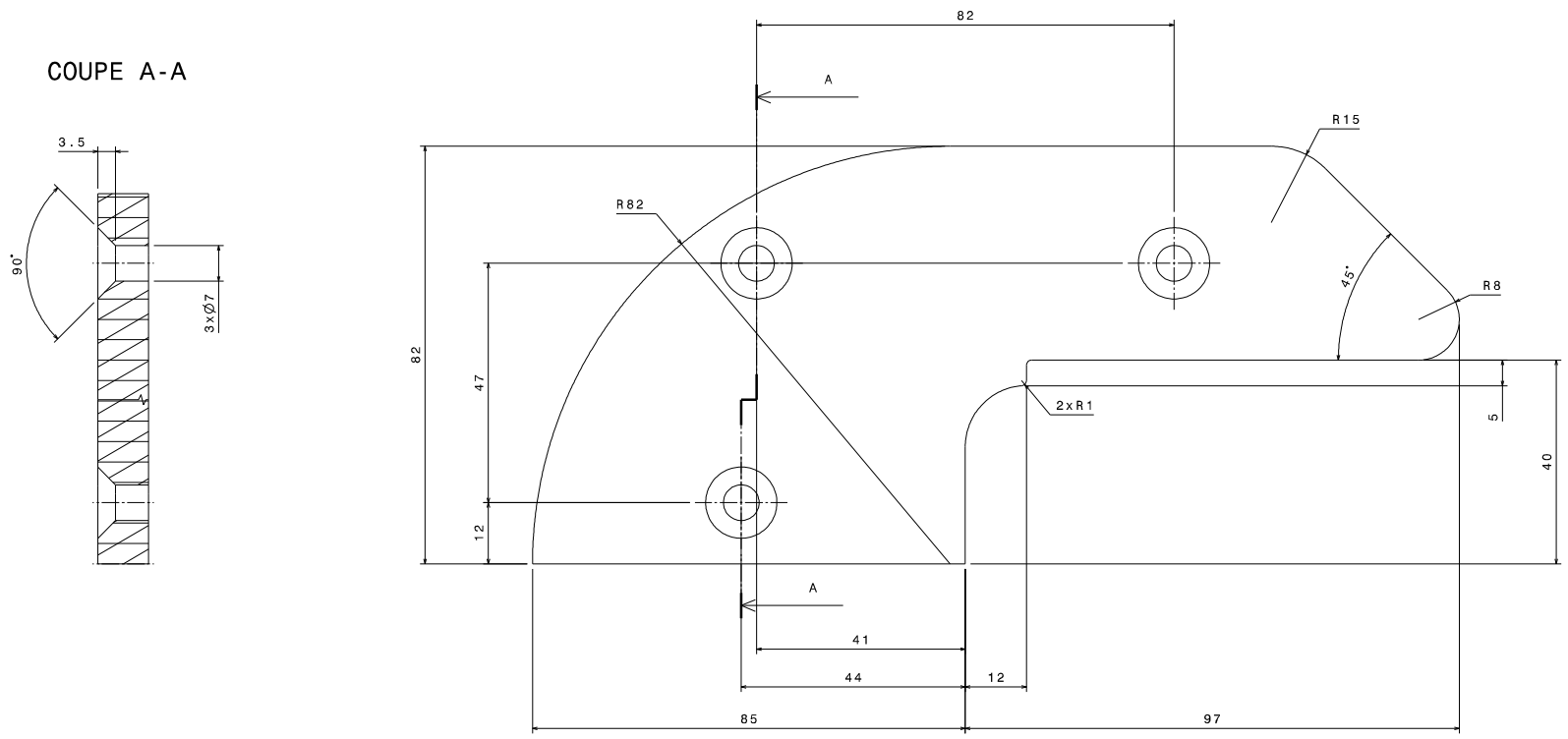

REP 0002

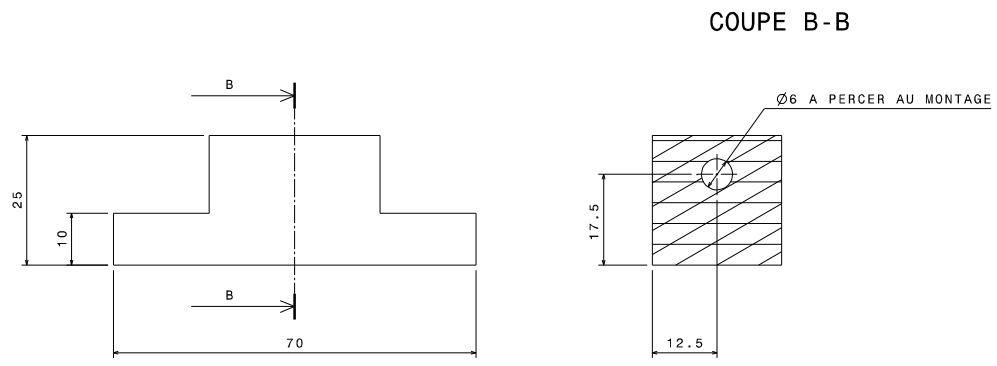

REP.	Qty	Sh.	DESIGNATION	REFERENCE	MATIERE	FNR	OBSERVATION
0002	1	-	BUTEE PINCE	098-LI-19033-16-0002	ORIGINAL MATERIAL S GREEN	MURTFELDT	
0001	1	-	PROTECTION PINCE SYM	098-LI-19033-16-0001	ORIGINAL MATERIAL S GREEN	MURTFELDT	SYM REP 0000
0000	1	-	PROTECTION PINCE	098-LI-19033-16-0000	ORIGINAL MATERIAL S GREEN	MURTFELDT	

SIZE: X X
WEIGHT (kg):
TOLERANCES GENERALES: DIN ISO 2768 m-K
ROUGHNESS: 3,2 [1,6]

DESIGNED BY: LI / MB
DATE: 15/09/2016
CHECKED BY:
DATE: / /

DESIGNATION: PROTECTIONS PINCE

SIZE: A0
LAROCHE INDUSTRIES
CLIENT / PROJECT: STELIA ME 3X EPP T12 SA

SCALE: 2:1
DRAWING NUMBER: 098-LI-19033-16
SHEET: 1/1

I	–
H	–
G	–
F	–
E	–
D	–
C	–
B	–
A	15/09/16

This drawing is the property of LAROCHE INDUSTRIES; it can't be reproduced or communicated without our written agreement.